**www.tempo-foam.com**

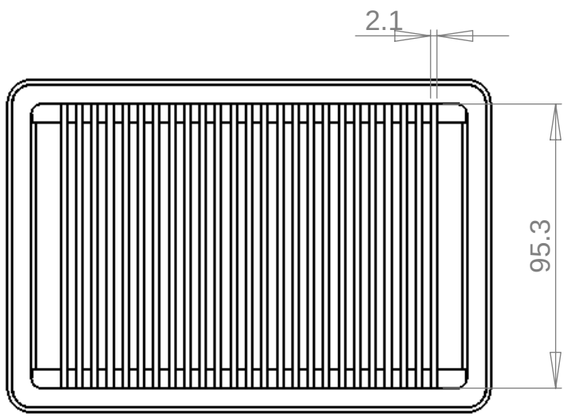


TOP VIEW OF BASE

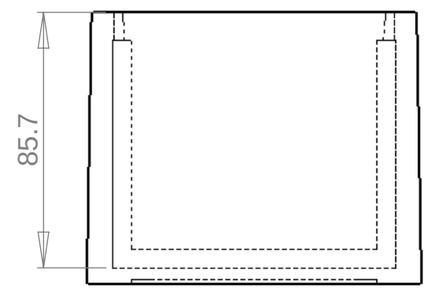


FRONT VIEW OF BASE

TRANSPARENT LID SHOWS SLOTS FOR 25 PCS.

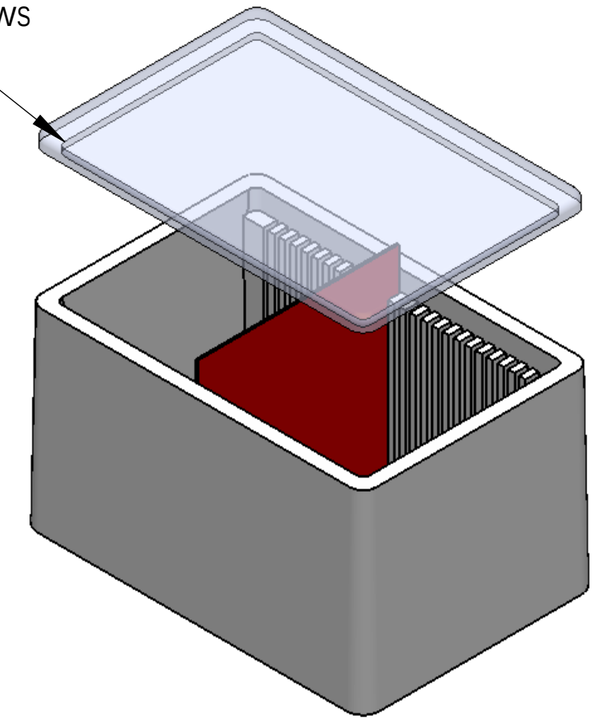

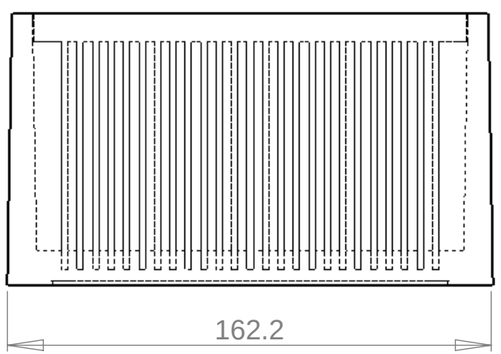


SIDE VIEW OF BASE

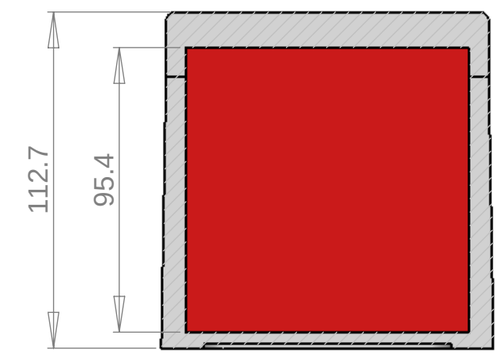


CUT SECTION WITH PART IN PLACE

Note:
1) Material To be 64g/l density (4.0 lb/ft3) EPS, Static Dissipative
2) 1 Degree Draft TYP
3) Dimensions shown are in millimeters


**PROPRIETARY AND CONFIDENTIAL**

THE INFORMATION CONTAINED IN THIS DRAWING IS THE SOLE PROPERTY OF **Tempo Plastic Co., Inc.** ANY REPRODUCTION IN PART OR AS A WHOLE WITHOUT THE WRITTEN PERMISSION OF **Tempo Plastic Co., Inc.** IS PROHIBITED.


| NEXT ASSY | USED ON |
|---|---|
| APPLICATION | |

UNLESS OTHERWISE SPECIFIED:

DIMENSIONS ARE IN INCHES
TOLERANCES:
FRACTIONAL ±
ANGULAR: MACH ± BEND ±
TWO PLACE DECIMAL ±
THREE PLACE DECIMAL ±

INTERPRET GEOMETRIC TOLERANCING PER:

MATERIAL

FINISH

DO NOT SCALE DRAWING

| | NAME | DATE |
|---|---|---|
| DRAWN | Steven Alatorre | June 25, 2009 |
| CHECKED | | |
| ENG APPR. | | |
| MFG APPR. | | |
| Q.A. | | |

COMMENTS:

**Tempo Plastic Co., Inc.**

TITLE:

25S-3750

| SIZE | DWG. NO. | REV |
|---|---|---|
| B | | |

SCALE: 1:2 | SHEET 1 OF 1